Item	Name	Q.ty
1	CA.08.14.013	1
2	GZA.10.12.1.18	1
3	GZA.10.12.2	2
4	GZA.10.12.4	2
5	GZA.10.12.5	2
6	GZA.10.12.9	2
7	M.6x25.SH	1
8	PSP.1269255	2
9	V.STM3X5	2

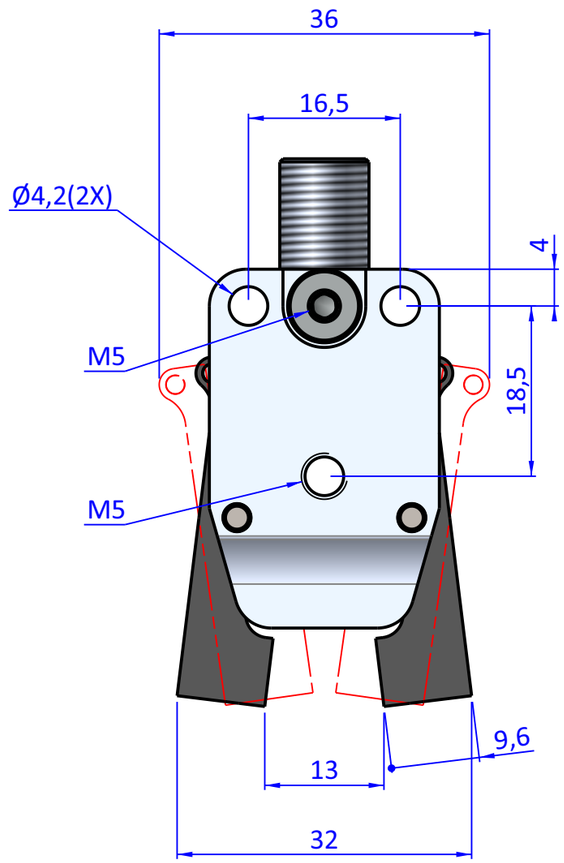

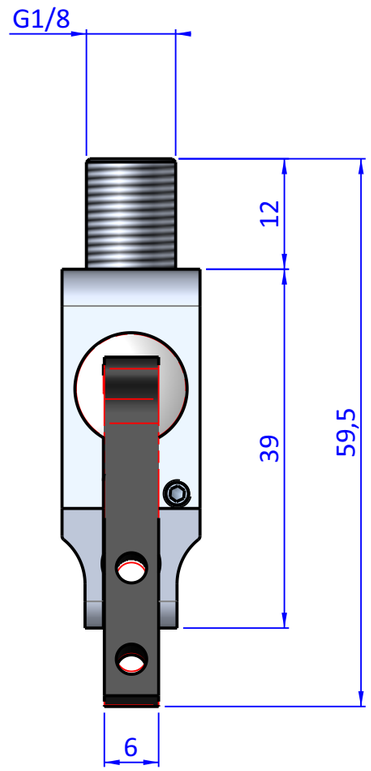

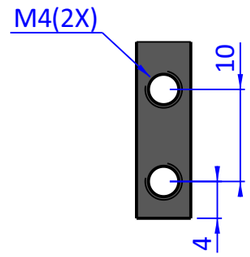

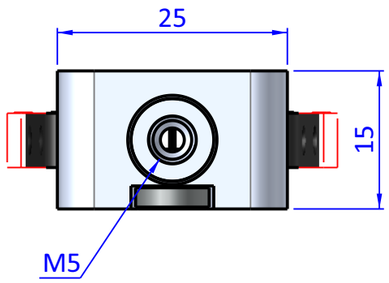

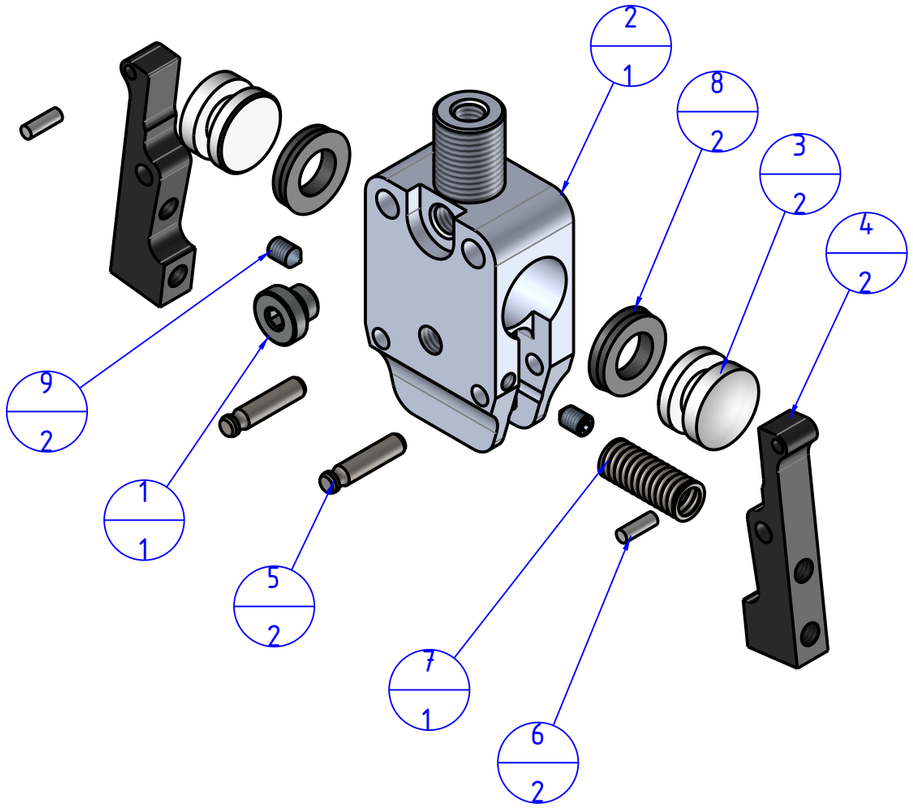

THE PROPERTY OF THE DRAWING IS ESTABLISHED BY LAW. IT IS FORBIDDEN TO PRODUCE OR SHOW IT TO THIRD PART, WITHOUT A WRITTEN AGREEMENT.

Format A3

UNI 936-76

FPS
FPSERVICES AUTOMATION

GENERAL TOLERANCE
UNI - ISO 2768
CLASSE f

DESCRIPTION
CA.GZA.10.12.18C

DESIGNED FROM
FPS Automation

REVIEW
A

DATE
20/07/2023

WEIGHT
0,032kg

CODE
CA.GZA.10.12.18C